Enhancement of Articulated Heavy Vehicle Stability by Optimal Linear Quadratic Regulator (LQR) Controller of Roll-yaw Dynamics

S.M. Shariatmadar,[1]* M. Manteghi[2], M. Tajdari[3]

1.MSc Student, 3 Professor Malek-E-Ashtar University, 2 Associate Professor , University of Tehran

* s.mojtaba.shariatmadar@gmail.com

Abstract

Non-linear characteristic of tire forces is the main cause of vehicle lateral dynamics instability, while direct yaw moment control is an effective method to recover the vehicle stability. In this paper, an optimal linear quadratic regulator (LQR) controller for roll-yaw dynamics to articulated heavy vehicles is developed. For this purpose, the equations of motion obtained by the MATLAB software are coded and then a control law is introduced by minimizing the local differences between the predicted and the desired responses. The influence of some parameters such as the anti roll bar, change the parameters of the suspension system and track wide in articulated heavy vehicles stability has been studied. The simulation results show that the vehicle stability can be remarkably improved when the optimal linear controller is applied

Keywords: *Vehicle dynamics, LQR controller, Optimization, Stability, Yaw moment control.*

1. INTRODUCTION

Rollover and stability of the heavy vehicles is one of the most important and serious problems in the field of vehicle dynamics. Rollover is a type of vehicle accident where a vehicle turns over on its side or roof. The main cause for rollover is turning too sharply while moving too fast. When a vehicle is making a turn, the centrifugal force acting through the vehicle's center of gravity in the direction opposite to the one it is turning. This centrifugal force pushes the truck to the outside of the curve. If the centrifugal force is sufficiently large, the truck wills rollover away from the center of the curve. This centrifugal force depends on the speed of the truck and the curvature of the road.

The rollover of heavy vehicles is an important road safety problem world-wide. Several studies have reported that a significant proportion of the serious heavy vehicle accidents involve rollover. In 1996 and 1997, the US National Highway Traffic Safety Administration documented over 15000 roll-over accidents per year involving commercial heavy vehicles, including 9400 accidents annually involving tractor semi-trailer combinations [1,2]. A study reported that the majority of roll-over accidents in The Netherlands involve articulated heavy vehicles (typically tractor semi-trailer and tractor full trailer combinations) and occur on highways [3]. These accidents were attributed to three main causes: sudden course deviation, often in combination with braking, from high initial speed; excessive speed on curves; and load shift.

reports show that, in the US between 1992 and 1996, roll-over was the cause of approximately 12% of fatal truck and bus accidents and 58% of accidents in which truck drivers were killed [4,5].

Studies in Canada reported that roll-over occurred in around 40% of accidents involving tanker vehicles and 45% of accidents involving the transportation of dangerous goods [6, 7].

A review of heavy vehicle safety considered that while some rollover accidents to articulated vehicles were preventable given a sophisticated warning system and a highly skilled driver, the majority could only be avoided by the intervention of advanced active safety systems [8]. Winkler et al. also noted that it is very difficult for truck drivers to perceive their proximity to roll-over while driving [4, 9]. A driver steers, brakes and accelerates in response almost exclusively to the

[Downloaded from ie.iust.ac.ir on 2025-06-11]

behavior of the lead unit of a combination vehicle, and it is very difficult for the driver to sense the behavior of trailer and semi-trailer units. In particular, the flexible nature of tractor frames tends to isolate the driver from roll motions of trailer and semi-trailer units that might otherwise act as cues to impending roll-over.

Another study also found that an increase in the static roll-over threshold of 0.1 g in the range 0.4-0.7 g caused a 50% reduction in the frequency of roll-over accidents for tractor semi-trailer combinations. Roll-over accidents accounted for almost 50% of tractor semi-trailers with a static roll-over threshold of 0.4 g but less than 15% to tractor semi-trailers with a roll-over threshold of 0.6 g. Interestingly these statistics indicate that drivers do not drive less stable vehicles more cautiously (and conversely, do not drive more stable vehicles less cautiously). This is because drivers are unable to assess roll-over stability accurately while driving.

It is clear that even a modest increase in roll stability can lead to a significant reduction in the frequency of rollover accidents. This provides a compelling motivation for research into improving roll stability of heavy vehicles because of the serious safety, cost and environmental implications of rollover accidents.

In this paper, we used simultaneously anti roll bar and LQR controller and by this work, we could improve the roll stability about 26% rather than previous works. Also by increasing the width of track up to 15%, we could enhance the amount of roll stability about 40%.

In the rest of this paper, section 2 describes the extraction of motion equations for the articulated vehicle. Section 3 discusses the lateral load transfer (LLT). Section 4 presents linear quadratic regulator. Results are reported in section 5. Finally, conclusions are presented in section 6.

2. MODELLING THE YAW- ROLL DYNAMICS OF ARTICULATED VEHICLES

5.1. Model requirements

In order to investigate roll control strategies for articulated commercial vehicles with arbitrary numbers of vehicle units, it was necessary to develop a modeling methodology for deriving the equations of motion of vehicle models with suitable complexity. The vehicle models must be capable of capturing the essential handling and roll dynamics of the vehicle. Other vehicle motions, such as bounce and pitch, are of secondary importance. The models must be capable of representing the dynamics of a range of vehicle couplings – the A-coupling ("pintle hitch"), the B-coupling ("fifth wheel") and the C-coupling ("converter dolly") – as well as the torsional flexibility of vehicle frames. The model should be simple enough that the roll control system designer retains sufficient physical insight into the behavior of the system.

5.2. Equations of Motions

The vehicle modeling method is based on the linear single unit yaw-roll vehicle model developed by Segel [10], adapted to account for the interaction between connected vehicle units. It is effectively a generalization of the rigid tractor semi-trailer model used by Lin [11, 12]. The vehicle of interest is decomposed into generic vehicle units, each representing a section of the vehicle. The sprung and unsprung masses of each vehicle unit are lumped into a single mass, with yaw, sideslip and roll freedoms. The axles of each vehicle unit are considered to be a single rigid body, with flexible tires that can roll with respect to the roll centre. The sprung mass rolls about the roll centre, and is restrained by the torsional stiffness and damping of the suspension. A control torque, representing the torque applied by the active roll control system, also acts on the sprung mass. Vehicle units are joined together with couplings that have roll stiffness and yaw stiffness that can range from zero to infinity. Thus, A-couplings, B-couplings, C-couplings and torsional frame flexibility can all be modeled by selecting the appropriate coupling stiffnesses.

Each physical vehicle unit of an articulated vehicle is represented by one or more generic vehicle units in the model. For example, a tractor unit with a flexible frame is represented by two generic vehicle units – one for the steer axle and front structure of the tractor, and another for the drive axle(s) and rear structure. These two vehicle units are coupled with a torsional spring representing the flexibility of the chassis between the steer and drive axles.

Each generic vehicle unit has five equations of motion. Five equations will be written: lateral motion, yaw motion, roll motion for the sprung mass and equation for roll motion for each of the unsprung masses.

5.3. Adding anti roll bar

Adding anti roll bar to an axle will generate a roll moment between the sprung and unsprung masses in response to the lateral acceleration of the

[Downloaded from ie.iust.ac.ir on 2025-06-11]

vehicle. That will decrease the roll motion and increase the roll stability.

The moment generating by the anti roll bars is $M_a = k_a(\phi - \phi_u)$, this term will be added to the equations of roll motion of sprung mass and unsprung mass.

5.4. Equations of motion for the articulated vehicle

Equations of motion for the tractor

Equation of lateral motion

$$m_1 v_x(\dot{\beta}_1 + \dot{\psi}_1) - m_{s_1}(h_{s_1} - h_{r_1})\ddot{\phi}_1 = Y_{\beta_1}\beta_1 + Y_{\dot{\psi}_1}\dot{\psi}_1 + Y_\delta \delta(t) + F_c$$

Equation of yaw motion

$$I_{1zz}\ddot{\psi}_1 - I_{1xz}\ddot{\phi}_1 = N_{\beta_1}\beta_1 + N_{\dot{\psi}_1}\dot{\psi}_1 + N_\delta \delta(t) - (l_{a_1} - l_{f_1})F_c + k_\psi(\psi_2 - \psi_1)$$

Equation of roll motion of sprung mass

$$\begin{aligned} I_{1xx}\ddot{\phi}_1 - I_{1xz}\ddot{\psi}_1 = {} & m_{s_1} g(h_{s_1} - h_{r_1})\phi_1 \\ & + m_{s_1} v_x(h_{s_1} - h_{r_1})(\dot{\beta}_1 + \dot{\psi}_1) \\ & - k_f(\phi_1 - \phi_{uf}) - c_f(\dot{\phi}_1 - \dot{\phi}_{uf}) \\ & - k_{af}(\phi_1 - \phi_{uf}) - k_r(\phi_1 - \phi_{ur}) \\ & - c_r(\dot{\phi}_1 - \dot{\phi}_{ur}) - k_{ar}(\phi_1 - \phi_{ur}) \\ & - (h_{a_1} - h_{r_1})F_c + k_\phi(\phi_2 - \phi_1) \end{aligned}$$

Equation of roll motion of the front axle

$$\begin{aligned} m_{uf} v_x(\dot{\beta}_1 + \dot{\psi}_1)(h_{r_1} - h_{uf}) + {} & m_{uf} g(h_{r_1} - h_{uf})\phi_{uf} \\ & - h_r\left(Y_{\beta_1,f}\beta_1 + Y_{\dot{\psi}_1,f}\dot{\psi}_1 + Y_\delta \delta(t)\right) \\ & - k_{tf}\phi_{uf} + k_f(\phi_1 - \phi_{uf}) \\ & + c_f(\dot{\phi}_1 - \dot{\phi}_{uf}) + k_{af}(\phi_1 - \phi_{uf}) = 0 \end{aligned}$$

Equation of roll motion of the rear axle

$$\begin{aligned} m_{ur} v_x(\dot{\beta}_1 + \dot{\psi}_1)(h_{r_1} - h_{ur}) + {} & m_{ur} g(h_{r_1} - h_{ur})\phi_{ur} \\ & - h_{r_1}(Y_{\beta_1,r}\beta_1 + Y_{\dot{\psi}_1,r}\dot{\psi}_1) - k_{tr}\phi_{ur} \\ & + k_r(\phi_1 - \phi_{ur}) + c_r(\dot{\phi}_1 - \dot{\phi}_{ur}) \\ & + k_{ar}(\phi_1 - \phi_{ur}) = 0 \end{aligned}$$

Equation of motion for the semitrailer

The semitrailer has axles located only at the rear; these axles are combined in one axle, so there will be just one equation to describe the roll motion of the unsprung mass of the semitrailer.

Equation of lateral motion

$$m_2 v_x(\dot{\beta}_2 + \dot{\psi}_2) - m_{s_2}(h_{s_2} - h_{r_2})\ddot{\phi}_2 = Y_{\beta_2}\beta_2 + Y_{\dot{\psi}_2}\dot{\psi}_2 - F_c$$

Equation of yaw motion

$$I_{2zz}\ddot{\psi}_2 - I_{2xz}\ddot{\phi}_2 = N_{\beta_2}\beta_2 + N_{\dot{\psi}_2}\dot{\psi}_2 - (l_{f_2})F_c - k_\psi(\psi_2 - \psi_1)$$

Equation of roll motion of sprung mass

$$\begin{aligned} I_{2xx}\ddot{\phi}_2 - I_{2xz}\ddot{\psi}_2 = {} & m_{s_2} g(h_{s_2} - h_{r_2})\phi_2 \\ & + m_{s_2} v_x(\dot{\beta}_2 + \dot{\psi}_2)(h_{s_2} - h_{r_2}) \\ & - k_t(\phi_2 - \phi_{ut}) - c_t(\dot{\phi}_2 - \dot{\phi}_{ut}) \\ & - k_{at}(\phi_2 - \phi_{ut}) + (h_{a_2} - h_{r_2})F_c \\ & - k_\phi(\phi_2 - \phi_1) \end{aligned}$$

Equation of roll motion of unsprung mass

$$\begin{aligned} m_{ut} v_x(\dot{\beta}_2 + \dot{\psi}_2)(h_{r_2} - h_{ut}) + {} & m_{ut} g h_{ut}\phi_{ut} \\ & - h_{r_2}(Y_{\beta_2}\beta_2 + Y_{\dot{\psi}_2}\dot{\psi}_2) - k_{tt}\phi_{ut} \\ & + k_t(\phi_2 - \phi_{ut}) + c_t(\dot{\phi}_2 - \dot{\phi}_{ut}) \\ & + k_{at}(\phi_2 - \phi_{ut}) = 0 \end{aligned}$$

It remains to develop the equation of the kinematic constraint at the vehicle articulation:

$$\beta_1 - \beta_2 - \frac{(h_{a_1} - h_{r_1})}{v_x}\dot{\phi}_1 + \frac{(h_{a_2} - h_{r_2})}{v_x}\dot{\phi}_2 - \frac{(l_{a_1} - l_{f_1})}{v_x}\dot{\psi}_1 - \frac{l_{f_2}}{v_x}\dot{\psi}_2 + \psi_1 - \psi_2 = 0$$

3. Lateral load transfer (LLT)

Roll dynamics in heavy vehicles is characterized in driving conditions by the lateral load transfer coefficient. This coefficient is a dynamic roll stability measure. The LLT of an axle is by definition:

$$LLT = \frac{load\ on\ left\ tyres - load\ on\ right\ tyres}{total\ load\ on\ axle}$$

The coefficient approaches unit value when the wheels on one-track of the axle lift off the ground, that means

$$\Delta F_{zf} = \pm \frac{F_{zf}}{2}$$

In articulated vehicles, in general, the tractor front axle employs a relatively soft suspension and supports considerably less load than tractor drive and trailer axles. Consequently, the front wheel of the tractor may still retain road contact when the roll instability is initialized.

Since the process of vehicle rollover is supposed to be initiated at the trailer rearward side, the value $LLT_t = \pm 1$ could be used as an early indication that the relative roll instability condition has been reached.

4. Linear quadratic regulator problem

The linear quadratic regulator (LQR) problem is the infinite horizon, time invariant linear quadratic optimal control problem. Consider a strictly proper system

$$\dot{x} = Ax + B_0 u, \qquad z = C_1 x$$

The LQR problem is to find the control u(t) that minimizes the quadratic performance index

$$J = \int_0^\infty (z^T Q z + u^T R u)dt$$

where the matrices Q and R are design parameters representing the relative weighting of the performance output trajectory y and the control input u respectively. For practical problems, Q is

[Downloaded from ie.iust.ac.ir on 2025-06-11]

positive semi definite, R is positive definite and (A, B_0) is controllable.

The solution is found using the calculus of variations, as detailed by Bryson and Ho [13]. The optimal control law is provided by a state feedback controller

$u(t) = K_{FB}x(t)$

where

$K_{FB} = -R^{-1}B_0^T S$

and S is a symmetric, positive semi definite matrix satisfying the Riccati equation:

$SA^T + A^T S - SB_0R^{-1}B_0^T S + C_1^T QC_1 = 0$

The controller configuration is shown in figure 1.

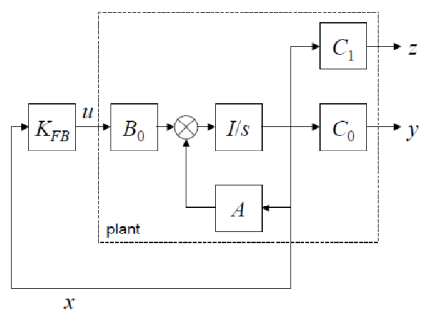

Fig1. Linear quadratic regulator

If (A, B_0) is controllable and (A, C_1) is observable, then equation (4.6) has a unique solution in the class of symmetric, positive semi definite matrices [14]. Furthermore, it can be shown that the closed-loop system

$\dot{x} = (A - B_0R^{-1}B_0^T S)x$

Q and R are weighting matrices chosen by the control system designer. Q penalises the output z (the normalized load transfers), and R penalises control action u (the control torques applied to each vehicle unit). By carefully varying the elements of Q and R, it is possible to balance performance and control action requirements at each axle. The LQR methodology ensures that the optimal system will keep load transfer z "small" without "excessive" control action u [15].

The simulation is done for a three axle tractor semitrailer vehicle, which is presented in figure 2. The weight and dimensional parameters of the candidate vehicle are presented in reference [11].

5. . Results and discussion

5.1. Lateral load transfer with a LQR controller

Figure 3 shows the normalized lateral load transfer for each axle before and after adding the LQR controller. As can be seen overshoot of the system using the controller LQR and the system is less than 4 seconds to steady state.

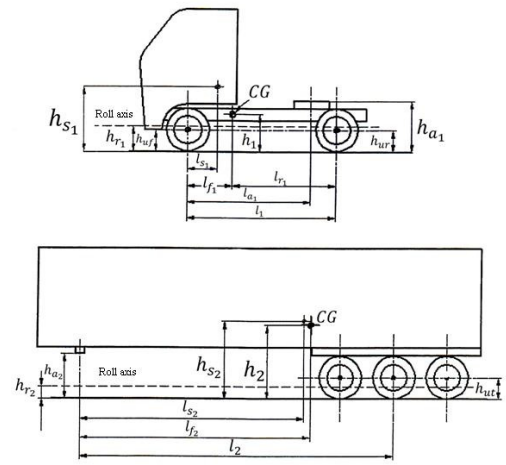

Fig2. Parameters of the articulated vehicle

This reflects the increased stability of the system's controller LQR.

The maximum value of LLT decreases from 0.97 to 0.84. The simulation results show that the vehicle stability can be remarkably improved when the optimal linear controller is applied.

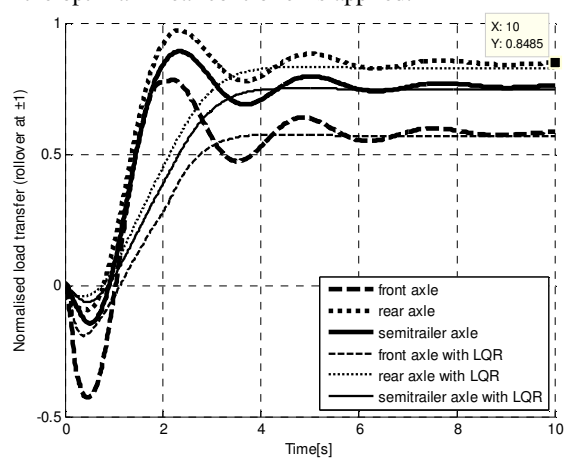

Fig3. Lateral load transfer with a LQR controller

5.2 Effect of anti roll bar and LQR controller

Figure 4 shows the normalized lateral load transfer for each axle before (the primary case) and after adding the anti roll bar. We can notice that the maximum LLT have been decreased noticeably. We can see that the semitrailer axle become the critical axle with a maximum value of LLT 0.7. The maximum lateral acceleration which corresponds to a unit value of LLT_t is 0.510g and by consequence the maximum value of speed in this case is about 70.0 km/h instead of 62.1 km/h for the radius of turn 73.3 m.

[Downloaded from ie.iust.ac.ir on 2025-06-11]

The percentage of improvement in roll stability in this case are done by comparing the maximum lateral acceleration that vehicle can sustain in the 2 case (with and without the anti roll bars) and it can be calculated as follows (0.510-0.406)/0.406=0.256 which means improvement of approximately 25.6%.

5.3 Effect of the track width

The effect of increasing the width of 15% is studied and the results are obtained the figure 5. The maximum value of LLT decreases from 0.97 to 0.72. The maximum lateral acceleration is about 0.57g which means as improvement in roll stability about 40% which correspond to a maximum forward speed about 74.2 km/h with the 73.3 m radius of turn.

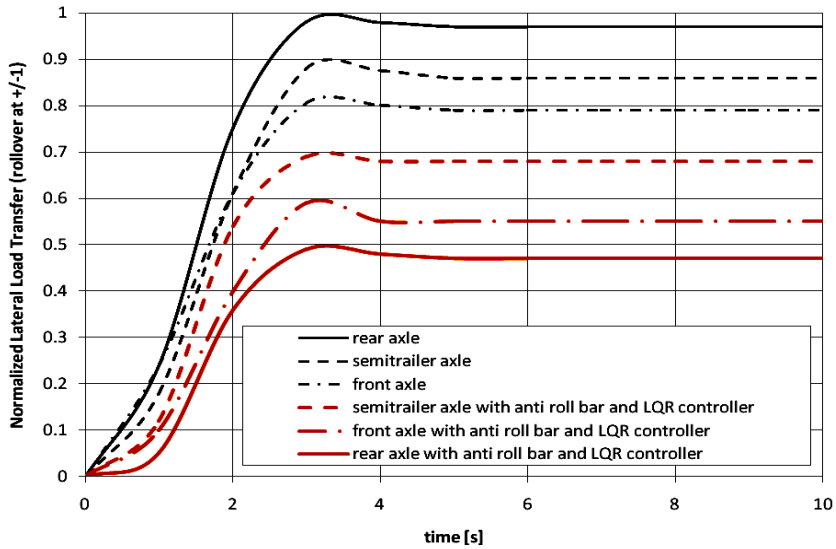

Fig4. Effect of anti roll bar and LQR controller

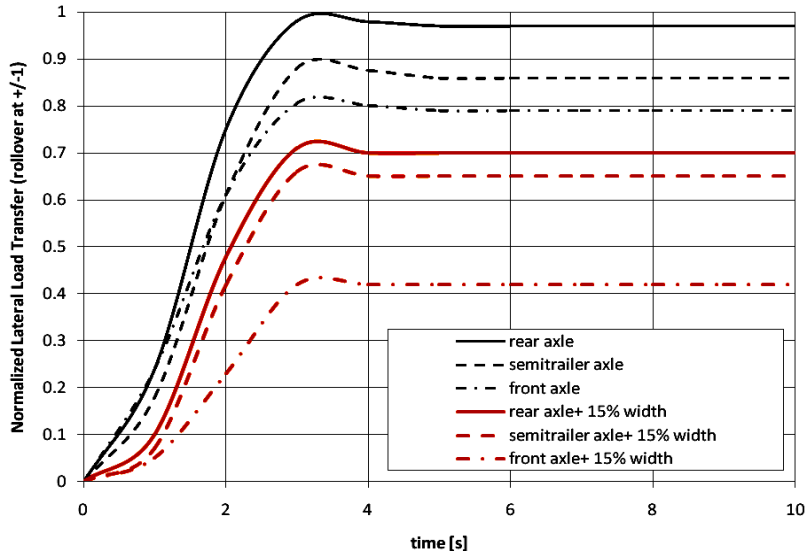

Fig5. Effect of the track width

[Downloaded from ie.iust.ac.ir on 2025-06-11]

6. Conclusion

Rollover occurs when a vehicle is unable to provide a stabilizing net restoring moment to balance an overturning moment. Wheel lift off at a particular axle when LLT = 1 has been taken as an early indication of rollover.

Simulation process has been done for studying the effect of many factor and next results have been achieved:

An improvement in roll stability about 25% was achieved by adding anti roll bars to the whole axles.

We have seen that the position of center of gravity of the semitrailer could affect the roll stability in positive or negative manner so placing the load on the semitrailer longitudinally forward or backward can increase the roll stability.

The suspension parameters have a big effect on the roll stability especially the stiffness of the suspension systems. Increasing k has the same effect as adding anti roll bar from the point of view of roll stability but having harder springs will affects the vertical dynamic vibrations in the bad way and may cause uncomforted and unsafely so adding anti roll bars with a soft springs of suspension systems is better.

For the case of increasing the track width of 15% results show an improvement of roll stability of about 40%.

The simulation results show that the vehicle stability can be remarkably improved when the optimal linear controller is applied

References

[1]. Blower, D. and Pettis, L. Trucks involved in fatal accidents. Technical Report UMTRI-98-14, University of Michigan Transportation Research Institute, Ann Arbor, MI, USA, 1998.

[2]. Blower, D. and Pettis, L. Trucks involved in fatal accidents. Technical Report UMTRI-99-18, University of Michigan Transportation Research Institute, Ann Arbor, MI, USA, 1999.

[3]. Kusters, L. J. J. Increasing roll-over safety of commercial vehicles by application of electronic systems. In Pauwelussen, J. P. and Pacejka, H. B., editors, Smart Vehicles, pages 362–377. Swets and Zeitlinger, Lisse, The Netherlands, 1995.

[4]. Winkler, C. B., Blower, D., Ervin, R. D., and Chalasani, R. M. Rollover of Heavy Commercial Vehicles. SAE, Warrendale, PA, USA, 2000.

[5]. Winkler, C. B., Bogard, S. E., Ervin, R. D., Horsman, A., Blower, D., Mink, C., and Karamihas, S. Evaluation of innovative converter dollies. Technical Report UMTRI-93-47, University of Michigan Transportation Research Institute, Ann Arbor, MI, USA, 1993.

[6]. Rakheja, S., Sankar, S., and Ranganthan, R. Roll plane analysis of articulated tank vehicles during steady turning. Vehicle System Dynamics, 17(2):81–104, 1987.

[7]. Rakheja, S., Sankar, S., and Ranganthan, R. Influence of tank design factors on the roll-over threshold of partially filled tank vehicles. SAE Transactions, 536–547, 1989.

[8]. Von Glasner, E.-Ch. Active safety of commercial vehicles. In Proc. 2nd International Symposium on Advanced Vehicle Control, pages 9–14, Tsukuba, Japan, 1994.

[9]. Winkler, C. B. and Ervin, R. D. On-board estimation of the rollover threshold of tractor semitrailers. In Proc. 16th IAVSD Symposium on the Dynamics of Vehicles on Roads and Tracks, pages 540–551, Pretoria, South Africa, 1999.

[10]. Segel L., "Theoretical prediction and experimental substantiation of the response of an automobile to steering control." Proc. IMechE Automobile Division, 1956-1957, pp. 310-330.

[11]. Lin R.C., "An investigation of active roll control for heavy vehicle suspensions." PhD thesis, Cambridge University Engineering Department, 1994.

[12]. Lin R.C., Cebon D. and Cole D.J., "Active roll control of articulated vehicles." VSD, Vol. 26 (No. 1), 1996, pp. 17-43.

[13]. Bryson, A. E. and Ho, Y. C. Applied Optimal Control. Blaisdell,Waltham, MA, USA, second edition, 1975.

[14]. Zhou, K., Doyle, J. C., and Glover, K. Robust and Optimal Control. Prentice Hall, Upper Saddle River, NJ, USA, 1996.

[15]. G. F. Franklin, J. D. Powell, and A. Emami-Naeini. Feedback Control of Dynamic Systems. Prentice Hall, Upper Saddle River, NJ, 4th edition, 2002

[Downloaded from ie.iust.ac.ir on 2025-06-11]

[Downloaded from ie.iust.ac.ir on 2025-06-11]

Nomenclature

$A; B_0; C_1$	State space matrices
C_α	Tire cornering stiffness, measured at rated vertical tire load
Fc	Lateral force in vehicle coupling
Fz	Vertical tire force
g	Acceleration due to gravity
hs	Height of centre of sprung mass, measured upwards from ground
hr	Height of roll axis, measured upwards from ground
ha	Height of articulation point, measured upwards from ground
hu	Height of centre of unsprung mass, measured upwards from ground
Ixx	Roll moment of inertia of sprung mass, measured about sprung centre of mass
Ixz	Yaw-roll product of inertia of sprung mass, measured about sprung centre of mass
Izz	Yaw moment of inertia of sprung mass, measured about sprung centre of mass
J	Quadratic performance index
K_{FB}	Controller transfer function
k	Suspension roll stiffness
kt	Tire roll stiffness
k_ϕ	Vehicle coupling roll stiffness
k_ψ	Vehicle coupling yaw stiffness
l	Wheelbase
l_f	Longitudinal distance front axle to center of gravity
l_a	Longitudinal distance front axle to articulation point
c	Damping of suspension
M	total mass
m_s	sprung mass
m_u	unsprung mass
Q	performance output weighting matrix
R	control input weighting matrix
h_r	Height of roll axis, measured upwards from ground
v_x	Vehicle speed
β	sideslip angle
α	tire slip angle
δ	steer angle
ϕ	absolute roll angle of sprung mass
ϕ_u	absolute roll angle of unsprung mass
ψ	heading angle
$\dot{\psi}$	yaw rate
$Y_\delta = C_{\alpha_f}$	Partial derivative of net tire lateral force with respect to steer angle
$N_\delta = C_{\alpha_f} l_f$	Partial derivative of net tire yaw moment with respect to steer angle
$N_\beta = -C_{\alpha_f} l_f + C_{\alpha_r} l_r$	Partial derivative of net tire yaw moment with respect to sideslip angle
$Y_{\dot{\psi}} = \left(\frac{-C_{\alpha_f} l_f + C_{\alpha_r} l_r}{v_x}\right)$	Partial derivative of net tire lateral force with respect to yaw rate
$Y_\beta = -\left(C_{\alpha_f} + C_{\alpha_r}\right)$	Partial derivative of net tire lateral force with respect to sideslip angle
$N_{\dot{\psi}} = \left(\frac{-C_{\alpha_f} {l_f}^2 - C_{\alpha_r} {l_r}^2}{v_x}\right)$	Partial derivative of net tire yaw moment with respect to yaw rate

[Downloaded from ie.iust.ac.ir on 2025-06-11]

Notation

$\boldsymbol{A^T}$	Transpose of A
$\boldsymbol{A^{-1}}$	Inverse of A
$\boldsymbol{a}$	First time derivative of a
$\boldsymbol{\ddot{a}}$	Second time derivative of $\ddot{a}$

Additional subscripts

$\boldsymbol{F}$	Front
$\boldsymbol{r}$	Rear
1	tractor unit
2	semitrailer unit

[Downloaded from ie.iust.ac.ir on 2025-06-11]

[Downloaded from ie.iust.ac.ir on 2025-06-11]

[Downloaded from ie.iust.ac.ir on 2025-06-11]